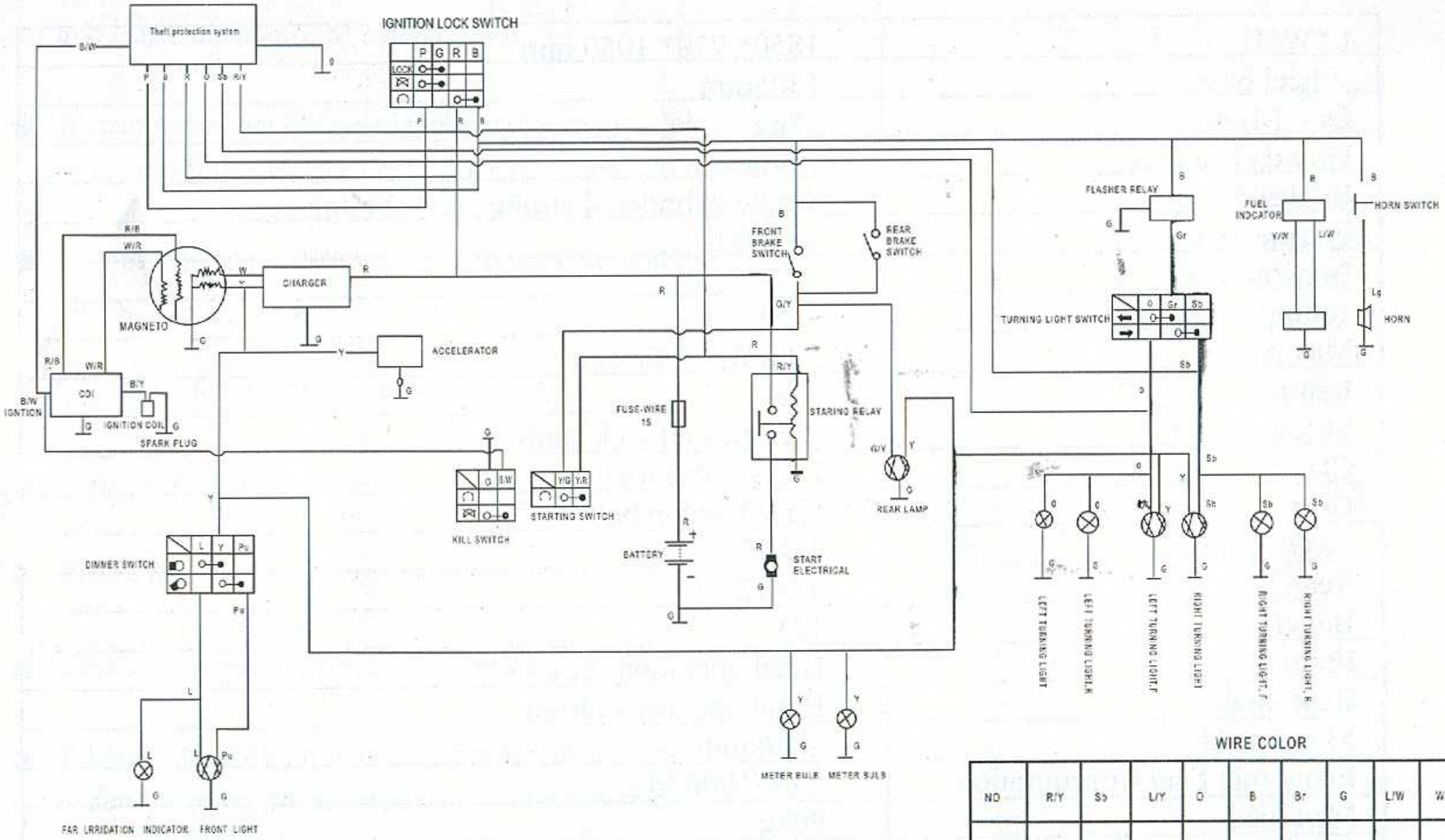

WIRE COLOR

NO	R/Y	Sb	L/Y	O	B	Br	G	L/W	W/Y	P	R
COLOR	red/yellow	dy blue	blue/yellow	orange	Mcnk	Colr	green	blue/white	white/yellow	pink	red
NO.	Gr	W	Y	R/B	R/W	B/Y	G/W	G/Y	W/R	BL	B/W
COLOR	gray	white	yellow	red/green	red/white	blank/yellow	green/yellow	green/yellow	white/red	cork green	blank/white