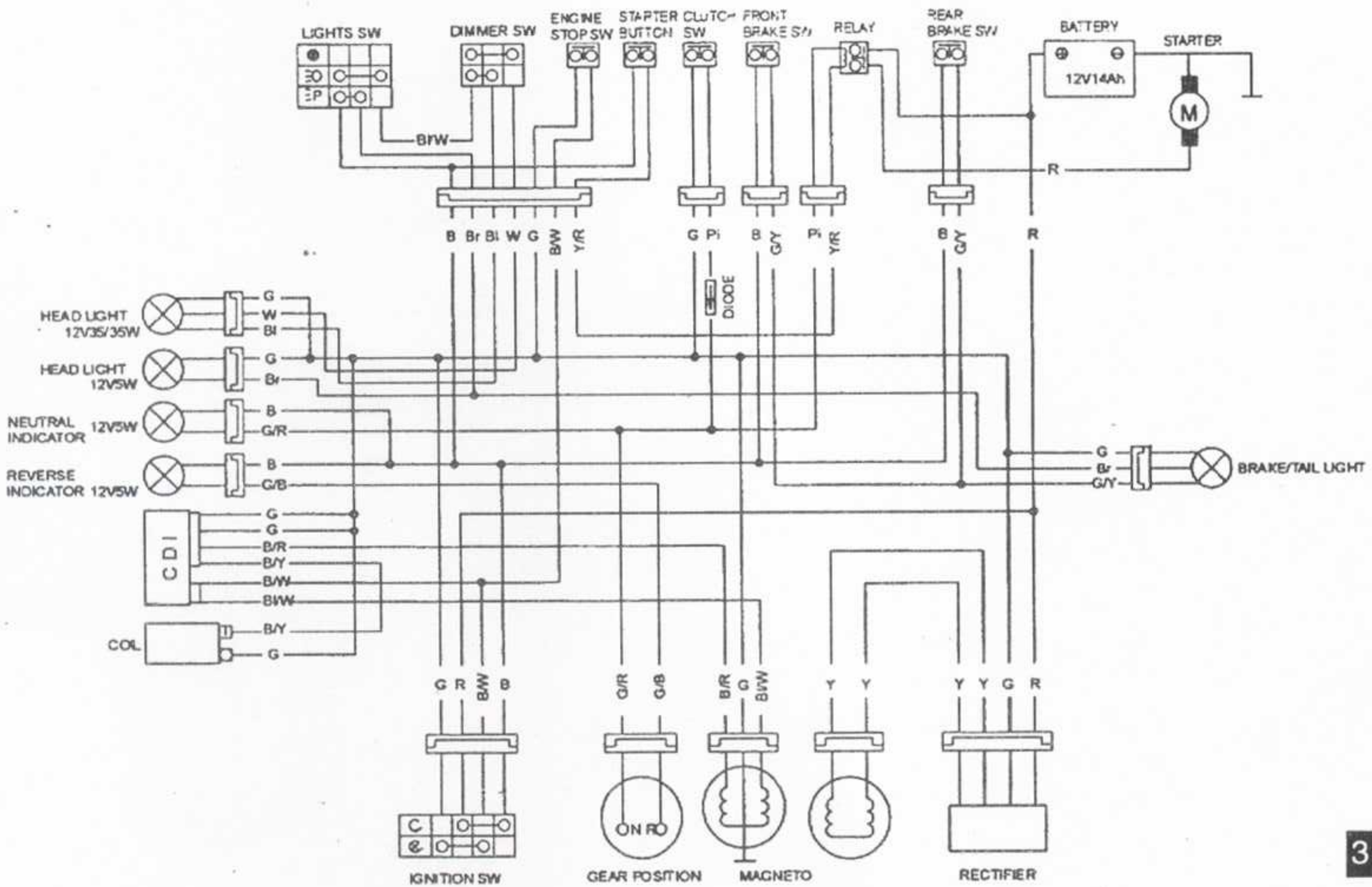ELECTRIC DIAGRAM